Low Noise Preamplifier Suitable for High Impedance Sources

Boris Yosifov Ribov

HARDWARE GROUP LTD - EMBEDDED HARDWARE AND SOFTWARE DEVELOPMENT
P.O. Box: 5, Plovdiv, 4000, Bulgaria
ribov@developer.bg

Abstract – **The amplification of low signals from inductive transducers is not an easy task. Existing integrated amplifiers are good enough but in some applications the requirements are for better signal to noise ratio and high gain. For example the LT1028/LT1128's voltage noise is less than the noise of a 50Ω resistor. Here we are discussing the practical aspects for designing an ultra low noise preamplifier with input voltage noise less than 5Ω resistor, which is about 0.3nV/√Hz.**

Keywords – **Low Noise Preamplifier**

I. Introduction

This paper covers practical aspects for building a contemporary ultra low noise preamplifier. The purpose of the experiments is to use this preamp on the first stage at the reproduce magnetic audio head. The signal generated from the head depends on the tape speed and the reference flux, but the typical values are between 0.17mV (tape speed of 4.76cm/s and track width of 0.6mm) and 4mV (tape speed of 38cm/s and track width of 2.75mm). The playback head has typical inductance about 200mH and resistance about 220Ω up to 350Ω. The self thermal noise of the head is about 1.9nV/√Hz to 2.4nV/√Hz and can be calculated by the simplified equation for the environment temperature of 25°C [4]:

$$Vn = 0.128\sqrt{R} \qquad (1),$$

where the R is the impedance in Ω and the Vn is the voltage variance in nano-volts per hertz of bandwidth. Because of the high source impedance of the head, it is good to use low input current noise stage on the front. For this purpose the input with JFET (Junction gate Field-Effect-Transistor) is better than the BJT (Bipolar Junction Transistor). There are many good working designs that use 2SK170 [1] and 2SK369 [3] on the front. Some of them use discrete components, the other are mixed with operational amplifiers on the second stage [2].

A. Initial research

The 2SK170 and 2SK369 produced by Toshiba are obsolete parts and are no longer supported and manufactured. There is replacement component from Linear Technologies, which part number is LSK170 [5]. It is good to be used but is hard to be found and it is very expensive. The input voltage noise of the LSK170 is about 0.9nV/√Hz, which is perfect for most designs. There is another good JFET transistor for the first stage, produced by NXP. Its part number is BF862 [6], it is easy to find and is not so expensive. Its input voltage noise is better than the LSK170 and is about 0.8nV/√Hz.

The source impedance is important for the type of the first stage. The JFETs have significant voltage noise compared to the good bipolar low noise transistors. On the other hand, the BJTs have significant current input noise, so the high impedance adds additional noise component. For the low impedance sources this component is relatively small, compared to the significant input voltage noise of the JFET. Comparison of some good low noise BJT [1] shows the proper ones for the input stage. As can be seen, the noise of the transistor primary depends on its equivalent base spreading resistance ($r_{bb'}$).

Table 1. Low Noise BJT

Model	Beta	Vn [nV/√Hz]	$r_{bb'}$
2N5210	350	2.01	227.9
2SC2362	188	1.55	130.5
2SC2909	155	1.47	115.4
2N5551	131	1.41	104.5
2SC2240	174	0.96	41.5
KSC3503	107	0.72	17.6
MJE15030	88	0.63	10.1
2SC3601	135	0.51	1.9
2SC2547	274	0.51	1.7

For low source impedances, the $r_{bb'}$ of transistor should be added to the source resistance r_s. That way it is performing as additional noise generator. There are other good transistors, not listen in Table 1. The 2SB737/2SD786 are listed on the specs with $r_{bb'}$ of a 2Ω but in the measurement their $r_{bb'}$ is much higher and is about 7.5Ω[7]. The 2SA1316/2SC3329 have $r_{bb'}$ of 2Ω and e_n of 0.6nV/√Hz. The wideband transistor BFW16A has h_{FE}>40 and measured $r_{bb'}$ of 4Ω. The 2SA1083-1085 and 2SC2545-2547 family belongs to the Hitachi. They have equal measured $r_{bb'}$ values about 14Ω. In the measurements, the commonly available BC337 ($r_{bb'}$ =30Ω) is slightly better than the SMD version BC817-40. The 2SA1312/2SC3324 ($r_{bb'}$ =20Ω) are the SMD replacement of the 2SA970/2SC2240. Obsolete 2SC2263U ($r_{bb'}$ =15Ω) was designed for head preamps and its h_{FE} is 520-1040.

Analog Devices produces a pair of matched transistors. Its part number is MAT12. Their input voltage noise is 1nV/√Hz and the $r_{bb'}$ is 28Ω. THAT Corporation also produces array of four matched transistors. They call their array *THAT 300* and consist of four NPN (THAT 300), four PNP (THAT 320) and a pair of two NPN and two PNP

978-1-5090-2883-2 /16/$31.00 ©2016 IEEE

(THAT 340). The input voltage noise for the PNP transistors is 0.75nV/√Hz; while the noise for the NPN is 0.8nV/√Hz. PNP base spreading resistance is 25Ω, while the NPN is in the range of 30Ω to 32Ω.

The BJT transistors have significant input current noise. For example typical Shot noise of a low noise transistor with β of 100 and 1mA collector current will produce 1.8pA/√Hz input current noise [8]. This high input current noise will produce another noise component at high source resistance. For example, the resistance of a typical moving magnet cartridge is about 1.5kΩ. The additional noise component, generated by the input current noise will be about 2.7nV/√Hz. The self thermal noise for 1.5kΩ source is about 4.96nV/√Hz. Adding different noise components can be done using:

$$Vs = \sqrt{V_1^2 + V_2^2 + \ldots + V_n^2} \qquad (2),$$

where Vs is the equivalent noise from the n voltage noise sources. The equivalent noise from the source based on the example above will be 5.65nV/√Hz (for the BJT) instead of 4.96nV/√Hz if we use JFET.

B. Topology

There are many good working designs [1,2,3] for low noise pre-amplifiers using JFET input. Traditional designs use good low noise op-amp and a differential pair of JFET in front of it. These designs use negative voltage feedback (VFB). The design presented in this paper use current feedback (CFB) in a type of a Comlinear amplifier. One primary difference between the CFB and VFB amps is that the CFB amplifier does not have a constant gain-bandwidth product. While there is a small change in bandwidth with gain, it is much less than the 6 dB/octave we see with a VFB op amp. Current feedback amplifiers have excellent slew-rate capabilities and this was a major for the design choice.

To rate the noise product of the amplifier, it is good to know how different noise components reflect to the design.

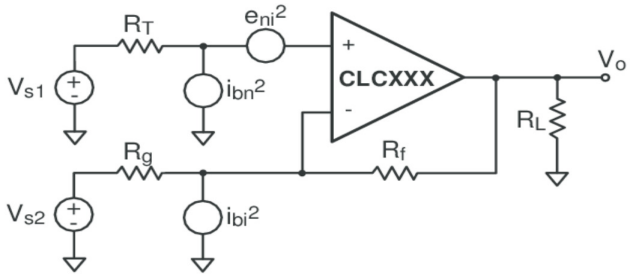

Fig. 1. Components of Current Feedback Amplifier

The equation for the output voltage noise density is [9]:

$$e_{no} = \sqrt{\begin{array}{l}(G\cdot e_{ni})^2 + (G\cdot i_{bn}\cdot R_T)^2 + (G\cdot e_{Rt})^2 + ((G-1)e_{R_G})^2 + \\ + e_{Rf}^2 + (i_{bi}\cdot R_F)^2 + (e_{ns1}\cdot G)^2 + (e_{ns2}(G-1))^2\end{array}} \qquad (3),$$

where:

- $G = 1 + R_F / R_G$; G is the gain of the amplifier;
- e_{no} is the voltage noise density seen at Vo (V/√Hz);
- e_{ni} is the non inverting input noise voltage (V/√Hz);
- e_{ns1} and e_{ns2} are voltage noise densities (V/√Hz) produced by V_{S1} and V_{S2};
- e_{Rt}, e_{Rf}, e_{Rg}, are the thermal noises of the resistors R_T, R_F and R_G (V/√Hz);
- i_{bn} and i_{bi} are the amp's input current noises (A/√Hz);

The load resistor (R_L) has a negligible contribution to the noise because the output resistance of the amp is very small. We can remove the second source V_{S2}, and ground the left terminal of R_G in unbalanced design. Also the i_{bn} of the JFET input is in the range of fA (femtoampere), so we can also remove this component from the noise calculations. To lower the noise of the amplifier it is good to use low values for the R_G and R_F.

Nakamichi [10] uses that kind of designs in their reference head playback amplifiers in the Dragon model (released in 1982) and in BX-300E (released in 1984).

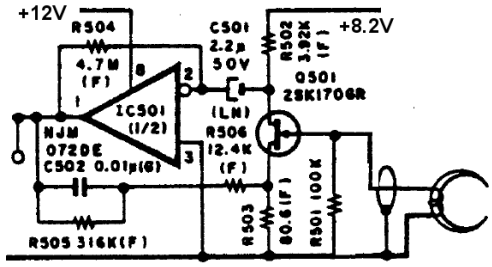

Fig. 2. Nakamichi Dragon playback amplifier

As can be seen from Fig 2 and 3, both designs use significantly high source resistors. The second major problem is the high input capacitance of the JFET. In this paper we use cascode configuration to eliminate the Miller capacitance problems with the JFET, thus allowing direct drive from the audio head.

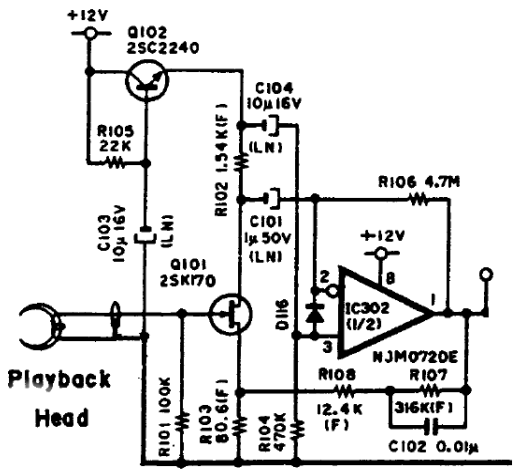

Fig. 3. Nakamichi BX-300E playback amplifier

As can be seen, both designs use direct head connection without coupling capacitor in the input. It is important to lower the noise in the input stage. Also the electrolytic capacitor has third harmonic distortion. A 1μF/63V was tested unbiased and the readings show 0.002% distortion. When soldering, we need to make sure that we don't exceed the maker's recommendations for time and temperature. Likewise, if it's at all possible, never operate an electro at

(or near) its maximum operating temperature, unless we accept the manufacturer's rated life at full operating temperature. For most caps, this ranges from 1,000 to 2,000 hours. That's not very long! In reality, most electrolytic caps exceed their claimed lifetime by a wide margin, even if they are operating at close to the maximum rated temperature. For every 10°C reduction of operating temperature, life approximately doubles, so a 125°C cap operated at 55°C should last for at least 128,000 hours - close to 15 years.

Design on Fig. 3 reduces both negative effects from the first coupling capacitor. The second interesting approach used in the Fig. 3 is the power supply ripple cancellation. The AC ripple from the supply filter (Q102) goes to the pin 3 of the IC302. That reduces the ripples at the output of the amplifier. Similar approach is used in the final design described down.

II. Project Goals and Implementation

The initial research shows some problems on the existing designs. One of the problems was the need of JFET input stage for the high input impedance sources. There is no good enough JFET, so paralleling was a decision to reduce the noise of the JFET.

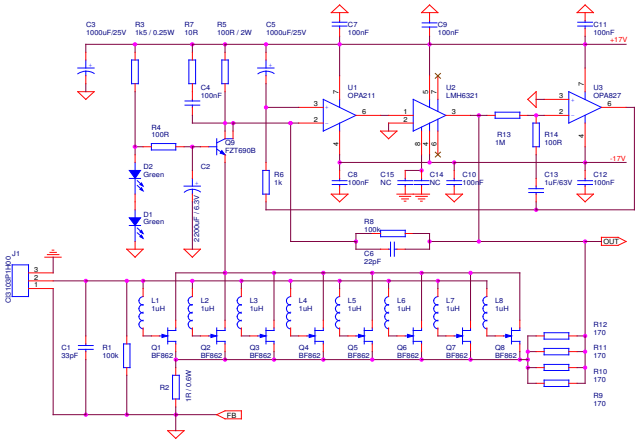

Fig. 4. Test bench of LNA

The test bench is based on the designs on Fig. 2 and 3, also follow the ideas of other low noise projects [1,2,3]. It uses:

- Eight parallel BF862 for the input stage. That approach reduces the equivalent input noise by square root factor of 8. So the equivalent input noise is 0.283nV/√Hz instead of 0.8nV/√Hz for a single transistor. The noise component at the output of the amplifier with gain of 40 is just 11.3nV/√Hz instead of 32nV/√Hz for a single JFET input. Paralleling 8 JFETs increase the input capacitance and the Miller effect.
- High gain BJT (FZT690B) in the cascode configuration to reduce the Miller effect. The collector load resistor of the BJT is only 100Ω, which allows the use of good bipolar SiGe amplifier with relative high input current noise on the second stage instead of precise expensive FET op-amp. We use OPA211 as the buffer amplifier with input voltage noise of 1.1nV/√Hz and current noise of 1.7pA/√Hz. FZT690B has a gain of 400 at 1A collector current. The measured noise of the transistor is 0.6nV at Ic=1mA and 0.38nV at Ic=10mA. Suitable transistor is also FZT849, which measured noise is about 0.5nV/0.21nV (the $r_{bb'}$ is less than 2Ω at 10mA).
- Current feedback design (CFB) with low resistance of the feedback network. This design uses 39Ω to 1Ω, which ensures gain of G=40. This gain is good enough for amplifying the input low signals in the range of 1-4mV. The thermal noise from the 1Ω resistor is just 0.128nV/√Hz and when it is amplified by a factor of *G-1*, it appears as 5nV/√Hz. For example if we use 80Ω as source resistor in the feedback network, the noise component generated by the resistor at the output will be 44.6nV/√Hz.
- High current buffer acts as a follower between the output of the OPA211 and the feedback network. Feedback network cannot be connected directly to the output of the OPA211 because of its current limit. The buffer is LMH6321 and has ability to supply ±300mA. This unity gain buffer has a voltage noise density of 2.8nV/√Hz and current input noise of 2.4pA/√Hz. The current noise is not important at all, because the buffer is connected to the low output impedance of the OPA211. The slew rate of the buffer is about 210 V/µS at 50Ω load.
- Power supply ripples cancellation circuit on pin 3 of U1. Even an extremely quiet power supply will still have something like 8nV/√Hz to 10nV/√Hz noise; under these circumstances, even with a local RC filter, achieving 0.3nV/√Hz is impossible (at least because a large electrolytic still has hundreds of milliohm impedance, not low enough to short the power supply noise voltage, usually with a much lower output impedance). By referring both op-amp inputs (in AC) to the positive power supply rail, the power supply noise is now appearing on the op-amp common mode, being therefore rejected through the op-amp CMRR. The overall head amp PSRR is down to better than -50dB.
- An inverting servo, built around an OPA827 JFET input op-amp is taking care of setting the OPA211 op-amp common mode voltage, so that the output offset is cancelled. That way the design removes all coupling signal capacitors.

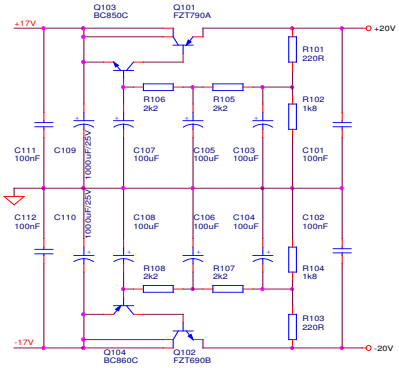

Fig. 5. Power Supply Filter

- The power supply noise has to be filtered out. A standard emitter follower power buffer (capacitance multiplier) does a pretty good job, however there's one thing that it can't filter out: the emitter follower $r_{bb'}$. To avoid that contribution, we need some sort of local feedback loop, to obtain a significant lower equivalent $r_{bb'}$. This is easily achieved by using an Sziklai configuration for the emitter follower. By including the power device in a

current feedback loop, its $r_{bb'}$ is effectively cancelled. It's now the low power device (which can be a low noise device) that dictates the equivalent $r_{bb'}$ of the emitter follower. The $r_{bb'}$ of BC550C/560C and BC850C/860C is about 150Ω so it is better to use BC817/807-40 or 2SC3324/2SA1312 even ZXTN2018F/ZXTP2027F ($r_{bb'}$ =3.3 Ω). It is only the Q103 and Q104 $r_{bb'}$ (Fig. 5) that contributes to the power supply noise. Divided by the head amp PSRR, this contribution is negligible.

III. PCB Design and Prototyping the LNA

Design was made on double-sided PCB using ground planes on both layers. Ground planes are connected to the shield ground. The base material is FR4 with thickness about 1.55mm. The copper thickness is 55µm. The standard copper thickness is 35µm but it is very important to have low resistance tracks around the feedback network because of the low resistance of the feedback network.

Most of the components are SMD. Wirewound resistors are the best choice for noise, followed by metal film, metal oxide, carbon film, and lastly, carbon composition. However, wirewound resistors are not readily available in large resistance values, and are usually inductive, which can cause instability problems in some cases. Many people prefer the "sound" of carbon comps, claiming they sound warmer than film or wirewound types. This is possibly due to distortions generated by the modulation of the contact noise current by the AC signal. Since this noise has a 1/f frequency characteristic (similar to pink noise), it is more pleasing to the ear than white noise. However, pleasing noise is still noise, and in my opinion, it should be reduced to the lowest possible level. The signal distortion is a different topic altogether. The electrolytic capacitors are based on the Panasonic FC Series Aluminum (105°C Low ESR) Electrolytic Capacitors. Some of them are SMD but the large capacitances are TH radial. The critical capacitors (C2, C5) are shielded with local metal folio cap, which is connected to the shield ground.

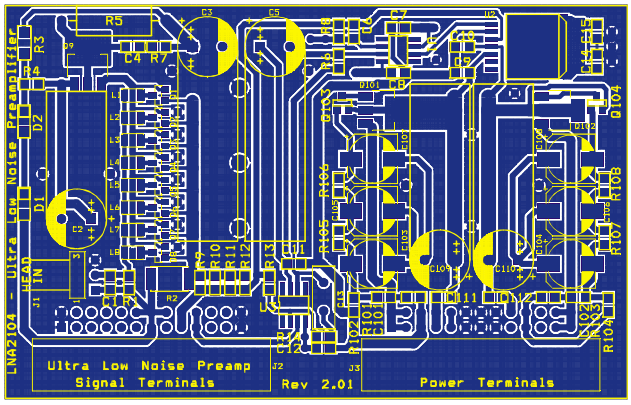

Fig. 6. Top layer of the LNA

Routing of the board is very critical for the good final results. One urgent thing is to avoid the current loops. The JFETs are placed close each other. A shielding copper plane is placed on the bottom side of the board. The design implements tree different grounds. One is the shield ground plane on the top and bottom layer. Both shield grounds are connected together but are not connected to the signal and power ground. Power ground comes from the power supply connector and first it reaches the filter capacitors C109-C110. Common net from the capacitors is used as reference signal ground and is connected to the ground pin of the feedback resistor R2. The ground pin of the input signal is connected also to the R2. Ground pin of the R2 acts as a reference pint to the analog ground. The track that connects the source terminals of the JFETs is placed on the top layer. For this track it is important to be as short as possible, also to be with enough width to avoid voltage difference on the source terminals of the transistors. This track is shielded on the bottom layer.

IV. Conclusion

The corner frequency of this low noise amplifier is remarkably low. This is another proof that BF862 is an excellent low noise JFET. The corner frequency is about 15Hz. The self-noise is around 4nV/√Hz at 10Hz and 1nV/√Hz at 40Hz. The level of harmonic noise (50Hz plus odd harmonics) is very low. This is a direct result of a compact SMD construction. The measured slew rate is about 40V/uS. The preamplifier was designed to operate at output level of 100mV RMS. The test shows significant overload ability. The output goes linear without clipping up to 6Vpp. The preamplifier is suitable both for high and low impedance sources because of its low input noise level (0.3nV/√Hz at 1kHz), which is better than most of the BJT.

This low noise amplifier will be used as a head preamplifier for a reference tape reproducer, which development was started at the end of 2015. Also this preamplifier will be used in the first stage of custom-made laboratory signal to noise meter [11]. Adding precise a-weighted filter to the output will be the next task in the project.

References

[1] Advanced DIY Audio Projects. *Low Noise Schematics*, http://www.synaesthesia.ca/

[2] Vojtěch Janásek. *Design of ultra low noise amplifiers*, http://www.janascard.cz/

[3] Bruno Neri, Bruno Pellegrini, and Roberto Saletti. *Ultra Low-Noise Preamplifier for Low-Frequency Noise Measurements in Electron Devices*, IEEE Transactions on Instrumentation and Measurement, Vol. 40, No.I, Feb. 1991

[4] Burkhard Vogel. *The Sound of Silence*, Springer, 2008, ISBN 978-3-540-76883-8

[5] Linear Integrated Systems, 2014, http://www.linearsystems.com/datasheets/LSK170.pdf

[6] NXP Semiconductors, 2000, http://www.nxp.com/documents/data_sheet/BF862.pdf

[7] *Letters to the editor*, Linear Audio, 2011

[8] Glen Ballou, *Handbook of Sound Engineers*, Focal Press, Inc., 2015, ISBN-13: 978-0415842938

[9] *OA-12 Noise Analysis for Comlinear Amplifiers*, Texas Instruments Incorporated, April 2013

[10] Nakamichi Research Corporation, Ltd. http://www.nakamichi.com/

[11] *Laboratory of Embedded Systems*, Technical University – Sofia, branch of Plovdiv, http://lab2104.tu-plovdiv.bg/